Paini Le Mans

Paini Le Mans shower mixer
Finish: Chrome
90CR690

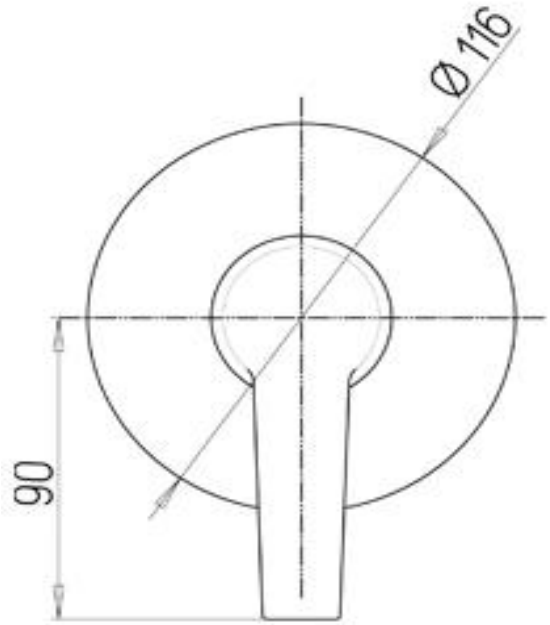

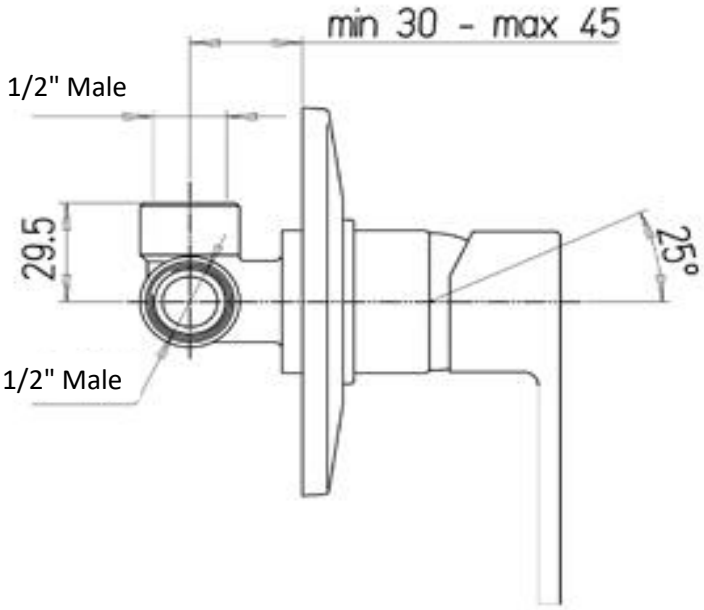

Made in Italynin LFDR brass

10 Year Warranty (2 Year Labour Warranty)

For Mains Pressure only

Max. Operating Pressure: 500Kpa.

Min. Operating Pressure: 150Kpa.

Pipework must be flushed before installation

Please install as per manufacturers instructions in the box

Due to our policy of continuous product development, the design and specification shown are subject to change without notice.

Please confirm all particulars with your sales consultant prior to purchase.